MILLENNIAL CONSUMERS' PURCHASE INTENTION FOR ECO-FASHION APPAREL: A STUDY FROM SOUTHERN CHINA

Bing Zhu[1,*]

Abstract

This study attempts to understand the role of value perceptions and environmental attitudes in influencing millennial consumers' intentions to buy eco-fashion apparel in Southern China. A total of 385 questionnaire responses were collected in Nanning via snowball sampling and convenience sampling techniques. The PLS-SEM method was applied to evaluate the data. The findings show that status value presents the strongest relationship with environmental attitude ($\beta=.308, t=7.209, p<.01$), followed by uniqueness value ($\beta=.213, t=3.826, p<.01$), materialism ($\beta=.242, t=3.398, p<.01$), price-quality perception ($\beta=.089, t=2.209, p<.05$), and conspicuous value ($\beta=.150, t=2.171, p<.05$). Moreover, environmental attitude exhibits the most significant influence on purchase intentions ($\beta=.765, t=31.730, p<.01$). Thus, corresponding implications are discussed.

Keywords: Eco-fashion, Value perceptions, Environmental attitude, Purchase Intention, Sustainable apparel

1. INTRODUCTION

In this postmodern era, consumption patterns are directed by diversity, freedom of choice and differentiation, which has resulted in the fragmentation of social identities and lifestyles (Featherstone, 1991; Haanpää, 2007; see also Miles et al., 2002). This, in turn has created unavoidable movements from societal, cultural, and intellectual perspectives (Berner, 2003). As its manifestation, the emergence of so-called environmentally responsible consumption, sustainable consumption, or green consumption, represents a continuous social movement, reflecting a change

[1,*]Dr. Bing Zhu obtains doctoral degree concentrated on sustainability and innovation from Catholic University of Eichstätt-Ingolstadt, Germany. Currently she is working as a full-time lecturer in the Department of Marketing, Assumption University of Thailand. Email: bingzhu.mkt@gmail.com

in consumer lifestyles, which is perceived as "a life-style based expression" (Haanpää, 2007, p. 479). This indicates that consumers' pro-environmental concerns and actions exhibit the philosophy of Todd (2012) who deems postmodern consumers as "you are what you buy." Consequently, in the face of increasingly serious environmental pollution and health threats, the concept of sustainable development is currently at the forefront (Chua et al., 2019; Jaini et al., 2020; Quoquab et al., 2019). Consumption structure is developing on a trend towards becoming more sustainable, and has caused consumers to gradually become more engaged with pro-environmental consumption by consuming more environmentally-friendly products and services (Auger et al., 2010; Jegethesan et al., 2012). This tendency has been revealed in the apparel industry in recent years.

Traditionally, the apparel industry has adversely affected the environment at all stages of the "product life cycle, starting from fibre growth and manufacturing, to dying and printing, transportation, storage and finally sales,"(Hill & Lee, 2012, p. 478) until the end of the life of the clothes (see also Dla, 2014; Fulton & Lee, 2010). For example, the fashion industry accounts for 8-10 percent of global carbon emissions (Celik, 2020). In light of the apparel industry causing enormous waste of resources and serious environmental pollution (Dla, 2014; Fulton & Lee, 2010; Hill & Lee, 2012), the fashion industry's commitment and actions for sustainable development are desirable (Daily Economic News, 2020). In this context, eco-fashion emerges as a new trend reflecting peoples' purchasing preferences and tastes, as well as an attitude that embraces the environment and nature. Increasingly, fashion brands have awakened from the business model of purely pursuing economic benefits (Dickson et al., 2009; Shen et al., 2012), meaning that they now pursue a balanced impact across the entire industrial chain, regarding the environment and society, as well as aiming to enhance awareness of corporate social responsibility, and as a consequence, practicing sustainable fashion has become a vital strategy for brand development (Daily Economic News, 2020). For instance, a greater number of consumers now prefer buying apparel that "uses organic cotton and natural dyes" (Jegethesan et al., 2012, p. 276; see also Sampson, 2009). This has spurred the demand of eco-apparel and has prompted various fashion brands (e.g. Nike, Levis, H&M, Zara and MUJI) to adjust their corporate strategies to be sustainability oriented in order to meet consumer needs (Dickson et al., 2009; Shen et al., 2012).

According to the International Standards Organizations (ISO), eco-fashion relates to "identifying the general environmental performance of a product within a product group based on its whole life-cycle in order to contribute to improvements in key environmental measures and to support sustainable consumption patterns" (Claudio, 2007, p. A453).

Alternatively, eco-fashion is also referred to as green fashion, ethical fashion, or sustainable fashion (Carey & Cervellon, 2014; Henninger et al., 2016), and symbolizes the 'megatrend' of being eco-friendly and socially responsible in the apparel industry (Mittelstaedt et al., 2014). Promisingly, according to the report of Grand View Research (2020), the global market size of eco fibers reached "$40.58 billion in 2019, and it is expected to grow at a compound annual growth rate of 4.6 percent from 2020-2027". This tendency is inseparable from a growing concern of sustainability and natural fabrics, which has driven the adoption of eco fibers in the global apparel industry (Grand View Research, 2020). In this regard, China is no exception.

Historically, China has played a dominant role in the global apparel industry (Irun, 2017), while the Chinese apparel market is projected to reach $615 billion by 2025 (Statista, 2019). In August 2018 China's Chain Store and Franchise Association (CCFA) reported that "safety and health" is the primary consideration for consumers in choosing sustainable products and services, while the two major factors of "environmental protection" and "quality" closely follow (Texnet, 2019). Additionally, the 2018 Yili China Sustainable Consumption Report pointed out that the public's attention to the issue of corporate social responsibility is on the rise, and that when shopping for apparel, consumers have begun to consider choosing environmentally friendly fabrics (PRNewswire, 2019). While Chinese consumers pay more attention to environmental and health issues (Su et al., 2019), this is emphasized particularly in their choice of apparel products based on recycled materials and sustainable fashion concepts (Smith, 2019). This is especially true among the millennials, who demonstrate a powerful force for eco-friendly practices in the apparel industry (Nielsen, 2016). The term millennials was coined by Howe and Strauss (2009) who refer to those individuals born between 1977 and 2000 (Kotler & Armstrong, 2013; see also Moreno et al., 2017). Currently, there are around 4.15 million Chinese millennials (Lu & Yiu, 2015) who have exhibited strong spending power (McKinsey, 2019) and higher levels of acceptance for novel products and services (Cavagnaro & Staffieri, 2015). Their preferences could reshape consumption patterns to be more sustainability oriented. According to Luxe.Co's 2018 White Paper on China's New Generation Fashion Consumption (Wang, 2018), 41.9 percent of young consumers reported that a brand's engagement in social responsibility largely affects their perception of the brand. Also, there is an obvious trend that when millennials pay attention to environmental and social issues, they "speak" their concerns through their consumption choices, which will inevitably become an irresistible megatrend (Wang, 2018).

However, there is little known information about the consumption behavior of millennials when

choosing eco-fashion products. For example, how their perception of the products influences their buying choices as millennials in general, and how this may grow to play a huge role in promoting the sustainability of the apparel industry. In this context, studying their perception of the basic dimensions of product value becomes important. Shukla (2012) addressed that value is the mechanism that evaluates the subjective worth of products or services based on a set of assessable and related measures (see also Zeithaml, 1988). However, only a few discussions can be found regarding how the underlying dimensions of product value are perceived by consumers, possessing a nature of subjectiveness. For this reason, the current research attempts to understand the influence of the underlying dimensions of value on millennials' buying behavior. Thus, value perception, the environmental attitudes of consumers, and consumers' buying intentions, are investigated to enrich the existing literature through updated findings from the millennial consumer group. The research objectives of the current study are as follows:

1) To understand the influence of millennials' value perceptions on their environmental attitudes.
2) To examine the relationship between millennials' environmental attitudes and their purchase intentions for eco-fashion apparel.

The current study is composed of a theoretical foundation, which is discussed in section 2, followed by the research design and methodology in section 3. Research findings are discussed in section 4, while the discussion and conclusion are presented in section 5. Finally, recommendations are addressed in section 6 and limitations are provided in section 7.

2. LITERATURE REVIEW

This section explains value perception, consumers' environmental attitudes, and consumer buying intentions.

2.1 Value Perceptions

Shukla (2012) conceptualized consumer value perception on the basis of three primary values, which are social value perceptions, personal value perceptions, and functional value perceptions. Value perception has mainly been applied in the context of luxury goods consumption, such as in the studies of Chattalas and Shukla (2015), Ercis and Celik (2018), and Zhang and Chaipoopirutana (2016), but it has rarely been applied in the context of eco-fashion apparel. For this reason, it is worth understanding how millennials' value perceptions could shape their buying behavior regarding eco-products. A brief review on the three types of value perceptions is given below:

Firstly, Chattalas and Shukla (2015, p.38) defined social value perceptions, stating that "*consumers' own choices as well as their expectations of others' choices in outcome-interdependent situations varies as a function of the weight they*

typically assigned to their own and others' outcome" (see also Tynan et al., 2010). Social value perception consists of conspicuous value and status value. Conspicuous value addresses individuals' wealth (Mason, 1992) and encourages consumers to pursue a sense of distinction (Warde, 2002). In this context, consumers should prioritize what makes them different from others (Haanpää, 2007). Status value reflects an individual's desire for recognition, acceptance, and privilege in his or her surroundings (O'cass & McEwen, 2004). It has been proven that a consumer's engagement in a purchase is largely influenced by the demand for social status and recognition, and that they expect to display their financial status through their method of purchasing and what products they use (Ercis & Celik, 2018; Souiden et al., 2011; Wiedmann et al., 2007). More importantly, consumers in emerging countries such as China have exhibited a strong demand for products that indicate their status (O'Cass & Siahtiri, 2014). By and large, for status-conscious consumers, their choice of apparel is equivalent to "self-expression" presenting their status in society (Clark et al., 2006; see also Michaelidou & Dibb, 2006; O'Cass & Siahtiri, 2014, p. 287). Therefore, the following hypotheses have been formulated:

H1a: Conspicuous value significantly affects consumers' environmental attitudes

H1b: Status value significantly influences consumers' environmental attitudes

Secondly, personal values are defined as "desirable trans-situational goals, varying in importance, which serve as guiding principles in people's lives" (Schwartz, 1994, p.21). In the context of consumption, consumer behavior is likely to be shaped by both internal and external motivational factors (Shukla, 2012). Internal motivational factors refer to hedonistic values, while external motivational factors relate to materialism (Hirschman & Holbrook, 1982). Simply put, this personal value-driven consumption behavior could strongly associate the consumer's self-image with the product he or she purchases, and link the individual's preferences and tastes with their image of a particular product or brand (Wong & Ahuvia, 1998). In particular, hedonism refers to the state in which a consumer pursues happiness, entertainment, or enjoyment (Grabriel & Lang, 2006; Miller, 2012). It is self-driven, and normally deals with acquiring the process of a product or experience with imagination and pleasure (Hirschman & Holbrook, 1982). In a fashion context, consumers love to seek for happiness when engaging in buying fashion items (Juggessur & Cohen, 2009). In the study of Scarpi (2006), hedonism-oriented consumers tend to buy more and are willing to pay higher prices than non-hedonistic consumers. Hedonic customers love to seek pleasure when buying fast fashion goods (Aydin, 2017). In contrast, materialism refers to an individual's possession of material goods such as property, which affect

his or her life (Aydin, 2017). Thus, possession of material goods serves as an effective communication tool with which consumers present who they are to the public and to their community (Belk, 1995; Yeniaras & Akkemik, 2017). Aydin (2017) revealed that materialism has a positive effect on consumers' involvement in consumption of fashion goods. Yeniaras and Akkemik (2017) reported that materialism positively triggers consumers' fashion consciousness. More importantly, in the milieu of pro-environmental study, materialism is indicated as one determinant of ecological attitudes and behaviors (Hurst et al., 2013; Wang et al., 2019). Steg et al. (2012) revealed a significant but negative relationship between hedonic value and environmental attitude, arguing that hedonic value is an important factor to understand environmental activities. Even if hedonism and materialism are found to influence consumer behavior, the link between personal value-driven elements, attitude as well as purchasing behavior still requires extensive empirical contributions (Vigneron & Johnson, 2004; Wiedmann et al., 2007; Wong & Ahuvia, 1998), especially regarding the fashion industry. Accordingly, the following hypotheses were developed:

H2a: Hedonism significantly affects consumers' environmental attitudes

H2b: Materialism significantly influences consumers' environmental attitudes

Functional value consists of uniqueness and price-quality perception, representing the most basic expectations of consumers for their products, as each product carries specific features to meet the specific needs of consumers (Chattalas & Shukla, 2015; Shukla, 2012; Smith & Colgate, 2007). When consumers pay for a product, they have a corresponding expectation for the price paid and the quality of the product. For them, it is normal to perceive high price as a symbol of premium quality. As long as the company offers a product with premium quality, the high price will not surprise customers as it is still perceived as reasonable. Thus, this reflects the linear relationship between price and quality (Rao & Monroe, 1988). Various studies have revealed the role of price and quality in pro-environment buying behavior such as Ferraz et al. (2017) and D'Souza et al. (2007), etc. Price and quality have been studied separately in understanding pro-environmental consumption, and have been examined as both mediators or antecedents of buying behavior. Due to the fact that studies to test their influences on consumers' environmental attitudes have rarely been conducted, the current study has adapted the recommendation of Shukla (2012) that price-quality perception should be examined as a single construct. Consequently, a possible relationship between price-quality perception and consumers' environmental attitude has been hypothesized. In addition, uniqueness

refers to the needs that consumers aim to fulfil when choosing fashion products (Shukla, 2012). Consumers in postmodern society tend to have a strong personal consciousness and seek to be different (Kumar et al., 2009), thus, they appreciate uniqueness in people, products and services (Asshidin et al., 2016). As a result, consumers choose to consume products and services in order to fulfil their demand for being unique, thereby promoting their social image (Tian et al., 2001). In this study, it is hypothesized that consumers perceive eco-fashion apparel as unique products, and consuming eco-fashion apparel is one way to enhance their social image of being environmentally friendly. In this context, the following assumptions have been developed:

H3a: Price-quality perception significantly affects consumers' environmental attitudes

H3b: Uniqueness significantly influences consumers' environmental attitudes

2.2. Consumers' Environmental Attitudes and Purchase Intentions

Naturally, attitude is defined as an individual's expression of his or her "favorableness or unfavorableness" when responding to "an object, behavior, person, institution, or event" (Ajzen, 1993, p. 41). Kingston (2016, p. 576) also defines attitude as "the tendency to think, feel or act positively or negatively towards objects in our environment" (see also Eagly & Chaiken, 1993). The linear relationship between attitude and behavior confirms that changes in personal attitude will directly lead to changes in the corresponding individual's behavior (Razzaq et al., 2018). In the context of pro-environmental study, environmental attitude is identified as an individual's beliefs, affection, and behavior regarding environmental issues and practice (Chen et al., 2018; De Medeiros & Ribeiro, 2018; Zhu, 2019). However, it is worth noting that whether environmental attitude will lead to environmental behavior is still controversial and debatable.

On the one hand, various recent studies underlined the prevalent influence of environmental attitudes on consumers' buying behavior. For instance, Malik et al. (2017) revealed the significant influence of environmental attitude on purchase intentions for green products. Razzaq et al. (2018) and Joung (2014) expound that for those consumers who express a positive attitude towards recycling or reusing will most likely engage in related pro-environmental practices. Maichum et al. (2017) addressed the predominant role of environmental attitude in predicting young consumers' buying intentions for green products in Thailand. On the other hand, some scholars have also questioned the positive influence of environmental attitudes in shaping consumer behavior. Kollmuss and Agyeman (2002) argued that environmental attitudes do not result in pro-environmental practices. More importantly, in the milieu of apparel, consumers who defined themselves as

pro-environmental may not convert their claims into real pro-environmental action such as buying eco-clothing (Hyllegard et al., 2006; see also Perry & Chung, 2015). This indicates a gap between environmental attitudes and environmental behavior (Perry & Chung, 2015).

In addition, Prakash and Pathak (2017) annotated that intention represents the readiness that individual possesses for performing a certain behavior (see also Ajzen, 2002). Asshidin et al. (2016) expounded that purchase intention is prevalent among the interests of marketers when trying to understand the potential of novel products, and that a person's attitude could significantly predict their intention for buying. Various pro-environmental studies have placed emphasis on the relationship between attitude and consumer purchase intentions. Particularly, in the pro-environmental context, purchase intentions could be identified as a consumer's willingness to purchase eco-, green, or environmentally-friendly products (Fauzan & Azhar, 2019), and environmental attitude is substantially associated with consumer intention (Yadav & Pathak, 2016). For instance, Fauzan and Azhar (2019) found that environmental attitude significantly and directly affects consumer purchase intentions for green products. Onurlubas (2018) reveals the mediating role of environmental attitude in estimating the relationship between environmental concern and green purchase intentions. Similarly, Zhu (2019) also confirms the impact of personal values on consumers' intentions to adopt a bike sharing scheme was also mediated by environmental attitude. Thus, based on the prior findings, the following hypothesis was developed:

H4: Consumers' purchase intentions for eco-fashion apparel are affected by their environmental attitudes.

3. RESEARCH DESIGN

The conceptual framework (Fig. 1) was constructed in the scope of value-attitude-behavior theory (Homer & Kahle, 1988). 385 questionnaires were collected in Southern China during September 2019 to January 2020 through a self-administered survey. Specifically, snowball sampling and convenience sampling techniques were applied to collect the data, with a short explanation provided for the respondents to enhance their understanding of the survey. In the questionnaire, a 5-point Likert scale was used, and the measurement items of three value perceptions were adapted from Shukla (2012), while those regarding environmental attitudes and purchase intentions were developed based on Malik et al. (2017) .

For the statistical analysis, Partial Least-Square Structural Equation Modelling (PLS-SEM) was run based on the SmartPLS3 program (Ringle et al., 2015). As an emerging technique, PLS-SEM has been applied by various researchers such as Hair et al.

(2012), Nitzl et al. (2016), Khan et al. (2018), and Henseler et al. (2016) etc. The stronger statistical power to assess statistical significance in a predictive model (Reinartz et al., 2009) with a less serious issue of normality (Hair et al., 2014) has led to PLS-SEM being gradually accepted and applied more widely in exploratory research in various disciplines (Hair et al., 2018). For these reasons, PLS-SEM is deemed to be a suitable analytical approach for this study. The evaluation of the measurement model and structural model follow the guidelines of Hair et al. (2018) and Henseler et al. (2016).

4. RESULTS

4.1. Respondent Profile

The respondents were mainly females (60 percent) aged between 25 and 30 years old (55.3 percent). Most possessed a bachelor's degree (68.6 percent) and had a monthly income of between 2000 CNY and 3000 CNY (37.1 percent). When asked 'which category of eco-fashion apparel do you prefer to buy?" the top 3 prevalent product categories for the respondents were T-shirt (24.9 percent), Shirt (23.6 percent), and Jeans (15.3 percent).

4.2. Evaluation of the Measurement Model

As addressed by Henseler et al. (2016), a standardized root mean square residual (SRMR) is an indicator to assess the approximate model fit, with a recommended threshold value of 0.08 (see also Hu & Bentler, 1999). The SRMR of this study possesses a value of 0.075, which confirms an approximate model fit when measuring the measurement model.

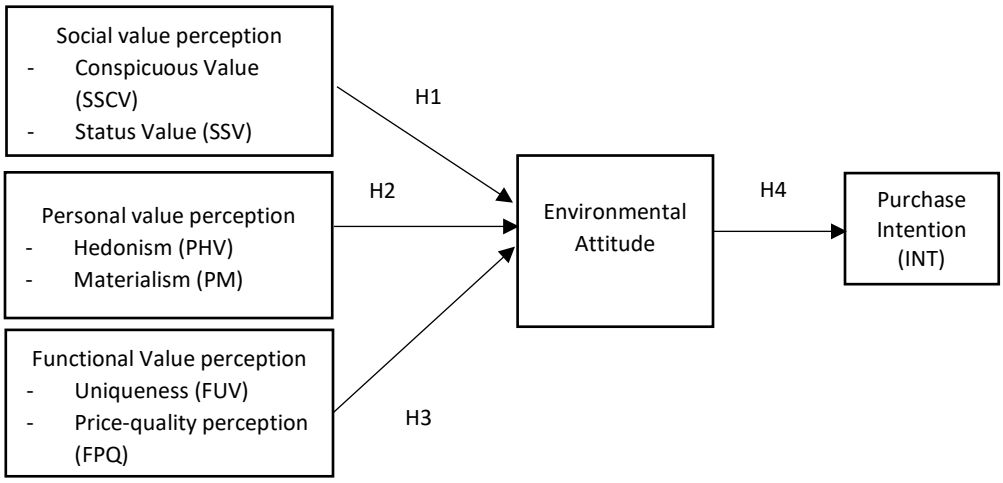

Figure 1. Proposed conceptual framework
Source: developed by author based on Shukla (2012) and Malik et al. (2017)

Table1 demonstrates the findings of convergent validity and internal consistency. First, convergent validity comprises factor loadings and average variance extracted (AVE). The values of the factor loadings (λ) are greater than 0.5, while with regard to the AVE, the values of all indicators surpass the threshold value of 0.5 as defined by Fornell and Larcker (1981). In terms of internal consistency, Cronbach's alpha, composite reliability (C.R.) and Dijkstra-Henseler's rho were used (Ramayah et al., 2018). Cronbach's Alpha values vary from .753 to .852, which is greater than the recommended value of 0.7 (Bagozzi & Yi, 2012) thus, the construct used in the measurement model confirms a high level of reliability and internal consistency. Composite reliability generates values that exceeded the threshold value of 0.7 as identified by Bagozzi and Yi (2012), for all indicators. In addition, as proposed by Dijkstra and Henseler (2015), the rho_A coefficient is an essential indicator to verify the reliability of a PLS construct, whereby the values of all constructs should be higher than 0.7 and less than 1 (see also Wong, 2019). Since all the results fulfil the respective requirements, internal consistency of the measurement model is confirmed.

Table 1. Construct reliability and validity Test

	Convergent Validity		**Internal consistency**		
	Indicator Loadings (λ)	AVE	Cronbach's Alpha	rho_A	C.R.
Environmental Attitude		0,669	0,753	0,777	0,858
AT1	0,868				
AT2	0,731				
AT3	0,848				
Price-quality perception		0,686	0,770	0,772	0,867
FPQ1	0,815				
FPQ2	0,869				
FPQ3	0,799				
Uniqueness value		0,741	0,825	0,847	0,896

Table 1 (continued)

FUV1	**0,839**				
FUV2	0,827				
FUV3	0,914				
Purchase Intention		0,734	0,819	0,830	0,892
INT1	0,883				
INT2	0,863				
INT3	0,823				
Hedonism Value		0,760	0,841	0,846	0,905
PHV1	0,902				
PHV2	0,893				
PHV3	0,818				
Materialism Value		0,689	0,778	0,807	0,869
PM1	0,863				
PM2	0,771				
PM3	0,854				
Conspicuous Value		0,693	0,852	0,853	0,900
SSCV1	0,803				
SSCV2	0,839				
SSCV3	0,842				
SSCV3	0,844				
Status Value		0,596	0,763	0,781	0,815
SSV1	0,834				
SSV2	0,751				
SSV3	0,728				

Discriminant Validity Test: In this study, the Heterotrait-Monotrait Ratio of Correlation (HTMT) was used to assess discriminant validity in the PLS-SEM (Hair et al., 2017). The $HTMT_{.90}$ criterion was recommended (Henseler et al., 2015), meaning that all values should be lower than 0.90. The results presented in Table 2 fulfil these requirements; as a result, the acceptance of discriminant validity is confirmed.

Table 2. Heterotrait-Monotrait Ratio (HTMT)

	Attitude	FPQ	FUV	Intention	PHV	PM	SSCV	SSV
Attitude								
FPQ	0,583							
FUV	0,811	0,565						
Intention	0,856	0,571	0,797					
PHV	0,699	0,392	0,618	0,712				
PM	0,829	0,367	0,673	0,694	0,559			
SSCV	0,854	0,610	0,836	0,833	0,771	0,672		
SSV	0,837	0,509	0,622	0,810	0,771	0,729	0,829	

4.3. Evaluation of the Structural Model

Firstly, R^2 was evaluated to verify the explanatory power of the proposed model (Hair et al., 2018; Shmueli et al., 2019). In the light of the guidelines of Hair et al. (2018, p. 11) that "R^2 values of 0.75, 0.50 and 0.25 can be considered (to have) substantial, moderate and weak" explanatory power respectively, the R^2 values for environmental attitude at 0.676 and purchase intention at 0.585, both indicate a moderate level of explanatory power.

Table 3 exhibits the results of collinearity, path analysis and the hypotheses. First, based on the discussion of Hair et al. (2011), VIF values higher than 5 signal a potential for collinearity. In this study, all VIF values are smaller than 5, thus, a collinearity issue does not exist in the structural model. Most importantly, path analysis was based on bootstrapping with 5000 subsamples. Insignificance occurs in the path from hedonism (PHV) to environmental attitude, thus, hypothesis 2a is rejected, while the other hypotheses are all supported. The strongest relationship is found between attitude and intention (*t=31.730*).

Table 3. Result of path analysis, hypothesis testing and collinearity

	Path	**VIF**	**Path Coefficient**	**T Values**	**P Values**	**Results**
H1a	SSCV -> Attitude	3,080	0,150	2,171	**	Supported
H1b	SSV -> Attitude	1,956	0,308	7,209	***	Supported
H2a	PHV -> Attitude	1,948	0,041	0,802	0,423	Rejected
H2b	PM -> Attitude	1,678	0,242	3,398	***	Supported
H3a	FPQ -> Attitude	1,382	0,089	2,209	**	Supported
H3b	FUV -> Attitude	2,238	0,213	3,826	***	Supported
H4	Attitude -> Intention	1,000	0,765	31,730	***	Supported

*** *p<.01* ** *p<.05*

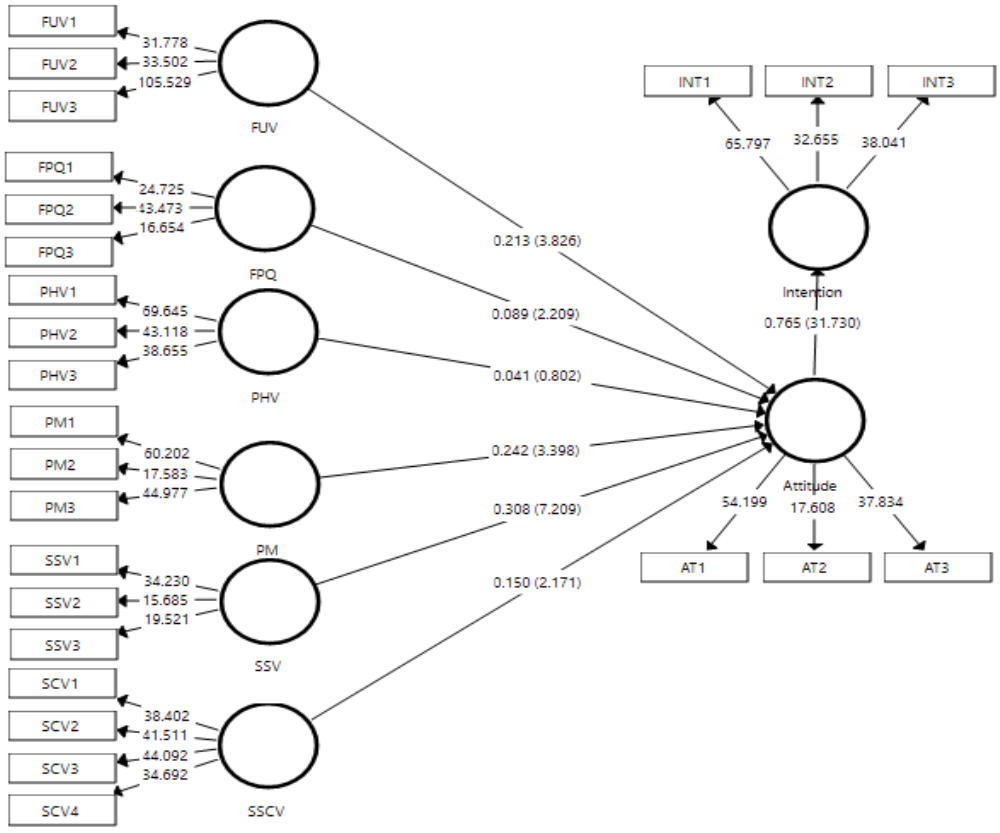

Figure 2. Path analysis presented by path coefficient and t-values.

5. DISCUSSIONS AND CONCLUSIONS

This study aims to understand how Chinese millennial consumers' value perceptions influence their environmental attitudes thereby stimulating their purchasing intentions for eco-fashion apparel in the scope of the value-attitude-behavior model. Three categories of value perceptions are included, namely social value perceptions (conspicuous value and status value), personal value perceptions (hedonistic value and materialistic value), and functional value perceptions (uniqueness and price-quality perception).

The findings show that among the six values, only hedonistic value does not positively affect environmental attitude. Status value presents the strongest relationship with environmental attitude ($\beta=.308$, $t=7.209$, $p<.01$), followed by uniqueness value ($\beta=.213$, $t=3.826$, $p<.01$), materialism value ($\beta=.242$, $t=3.398$, $p<.01$), price-quality perception ($\beta=.089$, $t=2.209$, $p<.05$),

and conspicuous value ($\beta=.150$, $t=2.171$, $p<.05$). Moreover, environmental attitude exhibits the most significant influence on purchase intentions ($\beta=.765$, $t=31.730$, $p<.01$).

The finding of a significant influence of environmental attitude on purchase intentions is in line with the results of numerous studies conducted by researchers such as Fauzan and Azhar (2019), Singh and Gupta (2011), and Zhu (2019), which support the powerful role of environmental attitude in reshaping consumers' ecologically-related behavior.

The next interesting findings outline the significant link between five value perceptions (conspicuous value, status value, materialism, uniqueness, and price-quality perception) and environmental attitude. According to Simmel (1904), fashion is closely related to the distinction of social status, and satisfies the needs of social adjustment, the requirements for difference, change, and individualization (see also Benvenuto, 2000). Correspondingly, in a postmodern society, consumers are grouped into a "new tribe" (Miles et al., 2002), which advocates consumption with differentiation, status, and novelty, which makes them dissimilar from others (Li, 2018). In this context, a strong relationship between conspicuous value, status value, materialism, and environmental attitude demonstrates that millennials tend to define distinctive tastes and status by expressing their attitudes towards the state of the environment by dressing in eco-fashion apparel, which endows them with recognition, and admiration, and synchrony with their community. In addition, the positive relationship between functional value perceptions (uniqueness and price-quality perception) and environmental attitude underlines that millennial consumers will pay great consideration to apparel products which fulfil their fundamental expectations and will affect the attitude they hold towards ecological issues. For them, consumption is equivalent to self-expression. They therefore choose to buy personalized products that can better represent themselves. While pursuing eco-fashion products and reshaping their own unique fashion style, they also focus on the balance between price and quality. For those eco-fashion products and brands that are of high quality, durable or have a sense of design, millennial consumers tend to be more willing to pay a certain premium as their consumption tendencies have affected their attention towards ecological or environmental issues.

More importantly, an insignificant relationship between hedonism and environmental attitudes reflects that in the context of eco-fashion, millennial consumers do not perceive buying eco-fashion products as a pleasurable or entertaining journey, which is in contrast to the findings of Aydin (2017). This may be related to the characteristics of eco-fashion apparel, such that unlike fast fashion products, purchasing eco-fashion

apparel is a relatively complicated process. Apart from considering the styles and design, consumers must confirm whether the products they buy have some eco-features (e.g., eco-labels and ingredient descriptions that meet eco-standards, etc.). Some meticulous consumers even log on to relevant websites to obtain corresponding information.

6. IMPLICATIONS

Theoretical implications: Theoretically, the current study updates the existing literature of fashion studies particularly in the field of sustainable fashion consumption based on the integration of value perceptions, environmental attitude, and purchase intentions. Moreover, the current study sheds light on the eco-fashion shopping behavior of millennial consumers in Southern China and addresses the role of environmental attitude in enhancing sustainable consumption. Besides this, status value, uniqueness, and materialism are the issues that should be given more attention when promoting eco-fashion apparel.

Managerial implications: Due to the fact that millennial respondents in the current study strongly exhibit their concerns regarding environmental issues, it is recommended that fashion brands which engage in eco production should predominantly advocate their contribution to environmental preservation; this echoes the findings of the aforementioned 2018 Yili China Sustainable Consumption Report. Second, referring to the insignificant role of hedonism, the development of the industry and its policies is inseparable from the idea of making the purchase of eco-fashion apparel a pleasurable and enjoyable shopping experience. The eco-fashion industry is still in its infancy stage in the Chinese market, so it is difficult for consumers to identify if the apparels they want to buy are genuine eco-products. As a result, market demand is far from being met. Thus, various related laws and policies must be promulgated and enforced, in order to form such a consumer market. In this context, it is necessary to strengthen the full understanding of sustainable consumption of the public by offering a sustainable consumption education program. It is also necessary to think about how to promote the development of sustainable consumption from the perspective of the entire industry chain.

Additionally, it is also practical for eco-fashion brands to choose movie stars and singers with a strong social image as ambassadors for eco-fashion apparel. This will not only strengthen the distinctive social image which eco-fashion apparels provide but will also promote the high-quality image that they symbolize.

7. LIMITATIONS

Similarly, to other studies, limitations are inevitable in this study. Primarily, the empirical data were collected from a limited number of millennial consumers in Nanning only, with which the findings cannot

represent millennial consumers' purchasing behavior for eco-fashion apparel across the whole of China, or across the world. For this reason, future studies should increase the sample size and distribution. Additionally, actual purchase behavior is absent as the study confines itself only to a survey of purchase intentions. Thus, personal interview and an emphasis on actual purchasing behavior are highly encouraged to obtain more comprehensive and realistic information.

REFERENCES

Ajzen, I. (1993). Attitude theory and the attitude-behavior relation. In D. Krebs & P. Schmidt (Eds.), *New Directions in Attitude Measuurement*. Walter de Gruyter.

Ajzen, I. (2002). Perceived behavioral control, self-efficacy, locus of control, and the theory of planned behavior. *Journal of Applied Social Psychology*, *32*(4), 665-683. https://doi.org/10.1111/j.1559-1816.2002.tb00236.x

Asshidin, N. H. N., Abidin, N., & Borhan, B. H. (2016). Consumer Attitude and Uniqueness towards International Products. *Procedia Economics and Finance*, *35*, 632-638.

Auger, P., Devinney, T., Louviere, J. J., & Burke, P. F. (2010). The importance of social product attributes in consumer purchasing decisions: a multi-country comparative study. *International Business Review*, *19*, 140-159.

Aydin, H. (2017). Influence of Self-Monitoring and Materialism on Fashion Clothing Involvement. *International Journal of Academic Research in Business and Social Sciences*, *7*(2). https://doi.org/DOI: 10.6007/IJARBSS/v7-i2/2639

Bagozzi, P. R., & Yi, Y. (2012). Specification, evaluation, and interpretation of structural equation models. *Journal of the Academy of Marketing Science*, *40*, 8-24.

Belk, R. W. (1995). Collecting as luxury consumption: Effects on individuals and households. *Journal of Economic Psychology*, *16*(3), 477-490.

Benvenuto, S. (2000). Book Review of Georg Simmel's Fashion. *Journal of Artificial Societies and Social Simulation (JASSS)*, *3*(2).

Berner, A. (2003). The postmodern consumer: Implications of changing customer expectations for organization development in service organizations. *SA Journal of Industrial Psychology*, *29*(3), 1-10.

Carey, L., & Cervellon, M.-C. (2014). Ethical fashion dimensions: pictorial and auditory depictions through three cultural perspectives. *Journal of Fashion Marketing and Management*, *18*(4), 483-506. https://doi.org/10.1108/JFMM-11-2012-0067

Cavagnaro, E., & Staffieri, S. (2015). A study of students' travellers values and needs in order to establish futures patterns and insights. *Journal of Tourism Futures*, *1*(2), 94-107.

Celik, G. (2020). *Sustainable Fashion: Is China's Fashion Industry Going Green?* Retrieved August 13 from https://equalocean.com/analysis/2020021613591

Chattalas, M., & Shukla, P. (2015). Impact of value perceptions on luxury purchase intentions: a developed market comparison. *Luxury Research Journal*, *1*(1), 40-57.

Chen, C. C., Chen, W. C., & Tung, Y. C. (2018). Exploring the Consumer Behavior of Intention to Purchase Green Products in Belt and Road Countries: An Empirical Analysis. *Sustainability*, *10*(3), 1-18. https://doi.org/doi:10.3390/su10030854

Chua, K. B., Quoquab, F., & Mohammad, J. (2019). Factors affecting environmental citizenship behavior: an empirical investigation in Malaysian paddy industry. *Asia Pacific Journal of Marketing and Logistics*, *32*(1), 86-104. https://doi.org/10.1108/APJML-05-2018-0177

Clark, R. A., Zboja, J. J., & Goldsmith, R. E. (2006). Status consumption and role-relaxed consumption: a tale of two retail consumers. *Journal of Retailing and Consumer Services*, *14*(1), 45-59.

Claudio, L. (2007). Waste Couture: Environmental Impact of the Clothing Industry. *Environmental Health Perspectives*, *115*(9), A449-A454.

D'Souza, C., Taghian, M., & Khosla, R. (2007). Examination of environmental beliefs and its impact on the influence of price, quality and demographic characteristics with respect to green purchase intention. *Journal of Targeting Measurement and Analysis for Marketing*, *15*, 69-78. https://doi.org/10.1057/palgrave.jt.5750039

Daily Economic News. (2020). *Exploring the path to eliminate pollution in the clothing and textile industry - "China Sustainable Fashion Consumption Survey" launched*. Retrieved 2 August from http://www.nbd.com.cn/articles/2020-04-15/1425614.html

De Medeiros, J. F., & Ribeiro, J. L. D. (2018). Environmentally sustainable innovation: Expected attributes in the purchase of green products. *Journal of Cleaner Production*, *142*, 240–248.

Dickson, M. A., Loker, S., & Eckman, M. (2009). *Social Responsibility in the Global Apparel Industry*. Fairchild Books.

Dijkstra, T. K., & Henseler, J. (2015). Consistent Partial Least Squares Path Modeling. *MIS Quarterly*, *39*(2), 297-316.

Dla, C. E. (2014). Eco-friendly concepts and ethical movements in the fashion industry. 7th International Textile, Clothing &

Design Conference-Magic World of Textiles, October 5th-8th 2014, Dubrovnik, Croatia.

Eagly, A. H., & Chaiken, S. (1993). *Psychology of Attitudes*. Harcourt Brace Jovanovich College Publishers.

Ercis, A., & Celik, B. (2018). *Impact Of Value Perceptions On Luxury Purchase Intentions: Moderating Role Of Consumer Knowledge* 4th Global Business Research Congress, May 24-25, Istanbul, Turkey.

Fauzan, N., & Azhar, N. F. (2019). *The Influence of Environmental Concern and Environmental Attitude on Purchase Intention towards Green Products: A Case Study of Students College in Universitas Muhammadiyah Yogyakarta* International Conference On Public Organization Asia Pacific Society For Public Affairs (APSPA), Khon Kaen, Thailand, 28-30 August 2019.

Featherstone, M. (1991). *Consumer Culture and Postmodernism*. Sage.

Ferraz, S. B., Buhamra, C., Laroche, M., & Veloso, A. R. (2017). Green products: a cross-cultural study of attitude, intention and purchase behavior. *Revista de Administração Mackenzie*, *18*(5), 12-38.

Fornell, C., & Larcker, D. F. (1981). Evaluating structural equation models with unobservable variables and measurement error. *Journal of Marketing Research*, *18*(1), 39-50.

Fulton, K., & Lee, S. E. (2010). An overview of sustainability in the fashion industry. *The International Journal of Environmental, Cultural, Economic and Social Sustainability*, *6*(1), 1-14.

Grabriel, Y., & Lang, T. (2006). *The Unmanageable Consumer*. Sage.

Grand View Research. (2020). *Eco Fiber Market Size, Share & Trends Analysis By Product, By Application, By Region, And Segment Forecasts, 2020-2027*. Retrieved 24 January from https://www.grandviewresearch.com/industry-analysis/eco-fiber-market

Haanpää, L. (2007). Consumers' green commitment: indication of a postmodern lifestyle? *International Journal of Consumer Studies*, *31*, 478-486.

Hair, F. J., Sarstedt, M., Ringle, C. M., & Mena, A. J. (2012). An assessment of the use of partial least squares structural equation modeling in marketing research. *Journal of the Academy of Marketing Science*, *40*(3), 414-433.

Hair, J. F., Hult, M. T. G., Ringle, M. C., & Sarstedt, M. (2017). *A Primer on Partial Least Squares Structural Equation Modeling (PLS-SEM)* (Second edition ed.). SAGE Publications, Inc.

Hair , J. F., Ringle, C. M., & Sarstedt, M. (2011). PLS-SEM: Indeed a silver bullet. *Journal of Marketing Theory and Practice*, *19*, 139-151.

Hair, J. F., Risher, J. J., Sarstedt, M., & Ringle, C. M. (2018). When to use and how to report the results of PLS-SEM. *European Business Review*, *30*(1), 2-24.

Hair , J. F., Sarstedt, M., Hopkins, L., & Kuppelwieser, G. V. (2014). Partial least squares structural equation modeling (PLS-SEM): An emerging tool in business research. *European Business Review*, *26*(2), 106-121.

Henninger, E. C., Alevizou, J. P., & Oates, J. C. (2016). What is sustainable fashion? *Journal of Fashion Marketing and Management*, *20*(4), 400-416. https://doi.org/10.1108/JFMM-07-2015-0052

Henseler, J., Hubona, G., & Ray, P. (2016). Using PLS Path Modeling in New Technology Research: Updated Guidelines. *Industrial Management & Data Systems*, *116*(1), 2-20.

Henseler, J., Ringle, M. C., & Sarstedt, M. (2015). A new criterion for assessing discriminant validity in variance-based structural equation modeling. *Journal of the Academy of Marketing Science*, *43*(1), 115-135. https://doi.org/10.1007/s11747-014-0403-8

Hill, J., & Lee, H.-H. (2012). Young Generation Y consumers' perceptions of sustainability in the apparel industry. *Journal of Fashion Marketing and Management*, *16*(4), 477-491.

Hirschman, E. C., & Holbrook, M. B. (1982). Hedonic Consumption: Emerging Concepts, Methods and Propositions. *Journal of Marketing*, *46*(3), 92-101.

Homer, P. M., & Kahle, L. R. (1988). A structural equation test of the value-attitudebehavior hierarchy. *Journal of Personality and Social Psychology*, *54*, 638-646.

Howe, N., & Strauss, W. (2009). *Millennials Rising: The Next Great Generation*. Vintage.

Hu, L. T., & Bentler, P. M. (1999). Cutoff criteria for fit indexes in covariance structure analysis: Conventional criteria versus new alternatives. *Structural Equation Modeling: A Multidisciplinary Journal*, *6*(1), 1-55. https://doi.org/10.1080/10705519909540118

Hurst, M., Dittmar, H., Bond, R., & Kasser, T. (2013). The relationship between materialistic values and environmental attitudes and behaviors: a meta-analysis. *Journal of Enviromental Psychology*, *36*, 257-269.

Hyllegard, K. H., Ogle, J. P., & Dunbar, B. H. (2006). The influence of consumer identity on perceptions of store atmospherics and store patronage at a spectacular and sustainable retail site. *Clothing and Textiles Research Journal*, *24*(4), 316-334.

Irun, B. (2017). *Business Opportunities and Challenges in The Textile and Apparel Market in China*. http://ccilc.pt/wp-content/uploads/2017/07/eu_sme_centre_report_tamarket_in_china_2017.pdf

Jaini, A., Quoquab, F., Mohammad, J., & Hussin, N. (2020). "I buy

green products, do you...?" The moderating effect of eWOM on green purchase behavior in Malaysian cosmetics industry. *International Journal of Pharmaceutical and Healthcare Marketing*, *14*(1), 89-112.

Jegethesan, K., Sneddon, N. J., & Soutar, N. G. (2012). Young Australian consumers' preferences for fashion apparel attributes. *Journal of Fashion Marketing and Management*, *16*(3), 1361-2026.

Joung, H.-M. (2014). Fast-fashion consumers' post-purchase behaviours. *International Journal of Retail & Distribution Management*, *42*(8), 688-697. https://doi.org/DOI 10.1108/IJRDM-03-2013-0055

Juggessur, J., & Cohen, G. (2009). Is fashion promoting counterfeit brands? *Journal of Brand Management*, *16*(5/6), 383-394.

Khan, F. G., Sarstedt, M., Shiau, W.-L., Hair, F. J., Ringle, C. M., & Fritze, P. M. (2018). Methodological research on partial least squares structural equation modeling (PLS-SEM). *Internet Research*, *29*(3), 407-429.

Kingston, T. (2016). Cute, Creepy, or Crispy—How Values, Attitudes, and Norms Shape Human Behavior Toward Bats. In C. C. Voigt & T. Kingston (Eds.), *Bats in the Anthropocene: Conservation of Bats in a Changing World*. Springer International Publishing. https://doi.org/DOI 10.1007/978-3-319-25220-9_18

Kollmuss, A., & Agyeman, J. (2002). Mind the gap: why do people act environmentally and what are the barriers to pro-environmental behavior?

Kotler, P., & Armstrong, G. (2013). *Fundamentos de Marketing*. Pearson.

Kumar, A., Lee, H. J., & Kim, Y. K. (2009). Indian consumers' purchase intention toward a United States versus local brand. *Journal of Business Research*, *62*(5), 521-527.

Li, H. (2018). On the Research Paradigm and Theme of Western Cultural Consumption Theory. *Journal of Shandong Normal University(Humanities and Social Sciences)*, *3*. http://www.cssn.cn/kxk/202002/t20200219_5090634.shtml

Lu, J., & Yiu, A. (2015). *The Asian Consumer, Chinese Millennials*. Goldman Sachs. Retrieved 11 August from https://xqdoc.imedao.com/14fcc41218a6163fed2098e2.pdf

Maichum, K., Parichatnon, S., & Peng, K.-C. (2017). The Influence of Environmental Concern and Environmental Attitude on Purchase Intention towards Green Products: A Case Study of Young Consumers in Thailand. *International Journal of Business Marketing and Management*, *2*(3), 1-8.

Malik, C., Singhal, N., & Tiwari, S. (2017). Antecedents of consumer environmental attitude and

intention to purchase green products: moderating role of perceived product necessity. *International Journal of Environmental Technology and Management*, *20*(5/6), 259-278.

Mason, R. (1992). Modelling the Demand For Status Goods. In W. F. Rudmin & M. Richins (Eds.), *Meaning, Measure, and Morality of Materialism* (pp. 88-95). Association for Consumer Research.

McKinsey. (2019). *China Luxury Report 2019: How young Chinese consumers are reshaping global luxury*. https://www.mckinsey.com/~/media/mckinsey/featured%20insights/china/how%20young%20chinese%20consumers%20are%20reshaping%20global%20luxury/mckinsey-china-luxury-report-2019-how-young-chinese-consumers-are-reshaping-global-luxury.ashx

Michaelidou, N., & Dibb, S. (2006). Product involvement: an application in clothing. *Journal of Consumer Behaviour*, *5*(5), 442-453.

Miles, S., Meethan, K., & Anderson, A. (2002). Introduction: the meaning of consumption; the meaning of change? In S. Miles, A. Anderson, & K. Meethan (Eds.), *Changing Consumer* (pp. 131-144).

Miller, K. (2012). Hedonic customer responses to fast fashion and replicas. *Journal of Fashion Marketing andVManagement*, *17*(2), 160-174. https://doi.org/DOI 10.1108/JFMM-10-2011-0072

Mittelstaedt, J. D., Schultz, C. J. I., Kilbourne, W. E., & Peterson, M. (2014). Sustainability as megatrend: two schools of macromarketing thought. *Journal of Macromarketing*, *34*(3), 253-264. https://doi.org/10.1177/0276146713520551

Moreno, M. F., Lafuente, G. J., Carreón, Á., F., & Moreno, M. S. (2017). The Characterization of the Millennials and Their Buying Behavior. *International Journal of Marketing Studies*, *9*(5), 135-144. https://doi.org/doi:10.5539/ijms.v9n5p135

Nielsen. (2016). *The keys to unclocking the Millennial mindset*. Retrieved 10 August from https://www.nielsen.com/us/en/insights/article/2016/keys-to-unlocking-the-millennial-mindset/

Nitzl, C., Roldan, L. J., & Cepeda, G. (2016). Mediation analysis in partial least squares path modeling: Helping researchers discuss more sophisticated models. *Industrial Management & Data Systems*, *116*(9), 1849-1864.

O'cass, A., & McEwen, H. (2004). Exploring consumer status and conspicuous consumption. *Journal of Consumer Behaviour*, *4*(1), 25-39.

O'Cass, A., & Siahtiri, V. (2014). Are young adult Chinese status and fashion clothing brand conscious?

Journal of Fashion Marketing and Management, *18*(3), 284-300.

Onurlubas, E. (2018). The Mediating Role of Environmental Attitude on the Impact of Environmental Concern on Green Product Purchasing Intention. *Emerging Markets Journal*, *8*(2). https://doi.org/10.5195/emaj.2018.158

Perry, A., & Chung, T. (2015). Understand attitude-behavior gaps and benefit-behavior connections in Eco-Apparel. *Journal of Fashion Marketing and Management*, *20*(1), 105-119. https://doi.org/10.1108/JFMM-12-2014-0095

Prakash, G., & Pathak, P. (2017). Intention to buy eco-friendly packaged products among young consumers of India: A study on developing nation. *Journal of Cleaner Production*, *141*(10), 385-393. https://doi.org/10.1016/j.jclepro.2016.09.116

PRNewswire. (2019). *Highlights of the 2018 Yili China Sustainable Consumption Report*. Retrieved 29 August from https://www.prnasia.com/story/235481-1.shtml

Quoquab, F., Mohammad, F., & Sukari, N. N. (2019). A multiple-item scale for measuring sustainable consumption behavior. *Asia Pacific Journal of Marketing and Logistics*, *31*(4), 791-816.

Ramayah, T., Cheah, J., Chuah, F., Ting, H., & Memon, A. M. (2018). *Partial Least Squares Structural Equation Modeling (PLS-SEM) using SmartPLS 3.0: An Updated and Practical Guide to Statistical Analysis* (Second Edition ed.). Pearson Malaysia Sdn Bhd.

Rao, R. A., & Monroe, B. K. (1988). The Moderating Effect of Prior Knowledge on Cue Utilization in Product Evaluations. *Journal of Consumer Research*, *15*(2), 253-264.

Razzaq, A., Ansari, Y. N., Razzaq, Z., & Awan, M. H. (2018). The Impact of Fashion Involvement and Pro-Environmental Attitude on Sustainable Clothing Consumption: The Moderating Role of Islamic Religiosity. *SAGE Open*, *8*(2). https://doi.org/https://doi.org/10.1177/215824401877461

Reinartz, W., Haenlein, M., & Henseler, J. (2009). An Empirical Comparison of the Efficacy of Covariance-Based and Variance-Based Sem. *International Journal of Research in Marketing*, *26*(4), 332-344.

Ringle, C. M., Wende, S., & Becker, J.-M. (2015). *SmartPLS 3*. In SmartPLS GmbH. http://www.smartpls.com

Sampson, L. K. (2009). *Consumer analysis of purchasing behavior for green apparel* North Carolina State University]. Raleigh, NC. https://repository.lib.ncsu.edu/handle/1840.16/431

Scarpi, D. (2006). Fashion stores between fun and usefulness.

Journal of Fashion Marketing and Management, *10*(1), 7-24.

Schwartz, S. H. (1994). Are There Universal Aspects in the Structure and Contents of Human Values? *Journal of Social Issues*, *50*(4), 19-45.

Shen, B., Wang, Y., Lo, K. Y. C., & Shum, M. (2012). The impact of ethical fashion on consumer purchase behavior. *Journal of Fashion Marketing and Management*, *16*(2), 234-245.

Shmueli, G., Sarstedt, M., Hair, F. J., Cheah, J.-H., Ting, H., Vaithilingam, S., & Ringle, M. C. (2019). Predictive model assessmet in PLS-SEM: guidelines for using PLSpredict. *European Journal of Marketing*, *53*(11), 2322-2347.

Shukla, P. (2012). The influence of value perceptions on luxury purchase intentions in developed and emerging markets. *International Marketing Review*, *29*(6), 574-596.

Simmel, G. (1904). Fashion. *Journal of International Quarterly*, *10*, 130-155.

Singh, N., & Gupta, K. (2011). Environmental attitude and ecological behaviour of Indian consumers. *Social Responsibility Journal*, *9*(1), 4-18.

Smith, J. B., & Colgate, M. (2007). Customer value creation: a practical framework. *The Journal of Marketing Theory and Practice*, *15*(1), 7-23.

Smith, T. (2019). *Do Chinese Consumers Care about Sustainable Fashion?* Jing Daily. Retrieved July 10 from https://jingdaily.com/do-chinese-consumers-care-about-sustainable-fashion/

Souiden, N., M'Saad, B., & Pons, F. (2011). A cross-cultural analysis of consumers' conspicuous consumption of branded fashion accessories. *Journal of Marketing*, *54*(2), 34-45.

Statista. (2019). *Global apparel market size projections from 2012 to 2025, by region (in billion US dollars)*. Retrieved 23 July from https://www.statista.com/statistics/279757/apparel-market-size-projections-by-region/

Steg, L., Perlaviciute, G., Van der Werff, E., & Lurvink, J. (2012). The Significance of Hedonic Values for Environmentally Relevant Attitudes, Preferences, and Actions. *Environment and Behavior*, *46*(2), 163-192.

Su, J., Watchravesringkan, K., & Zhou, J. H. (2019). Sustainable clothing: perspectives from US and Chinese young Millennials. *International Journal of Retail & Distribution Management*, *47*(11), 1141-1162. https://doi.org/10.1108/IJRDM-09-2017-0184

Texnet. (2019). *Consumer demand for sustainable fashion has been awakened. How does the "green trend" promote the industry?* Retrieved 1 September from http://info.texnet.com.cn/detail-741695.html

Tian, K. T., Bearden, W. O., & Hunter, G. L. (2001). Consumers' need

for uniqueness: Scale development and validation. *Journal of Consumer Research*, *28*(1), 50-66.

Todd, D. (2012). You Are What You Buy: Postmodern Consumerism and the Construction of Self. *HOHONU*, *10*, 48-50. https://hilo.hawaii.edu/campuscenter/hohonu/volumes/documents/Vol10x12YouAreWhatYouBuy-PostmodernConsumerismandtheConstructionofSelf.pdf?source=post_page

Tynan, C., McKechnie, S., & Chhuon, C. (2010). Co-creating value for luxury brands. *Journal of Business Research*, *63*(11), 1156-1163.

Vigneron, F., & Johnson, L. W. (2004). Measuring perceptions of brand luxury. *Journal of Brand Management*, *11*(6), 484-508.

Wang, J. Y. (2018). *Fashion, how to be friends with the ecological environment? Luxe.Co launches "Global Sustainable Fashion Monthly Report"*. Luxe.Co Retrieved 14 August from https://luxe.co/post/92113

Wang, L. X., Gu, D., Jiang, J., & Sun, Y. (2019). The Not-So-Dark Side of Materialism: Can Public Versus Private Contexts Make Materialists Less Eco-Unfriendly? *Frontiers in Psychology*, *10*(790). https://doi.org/10.3389/fpsyg.2019.00790

Warde, A. (2002). Setting the scene. Changing conceptions of consumption. . In S. Miles, A. Anderson, & K. Meethan (Eds.), *Changing Consumer* (pp. 10-24). Routledge.

Wiedmann, K. P., Hennigs, N., & Siebels, A. (2007). Measuring consumers' luxury value perception: a cross-cultural framework. . *Academy of Marketing Science Review*, *2007*(7).

Wong, K. K.-W. (2019). *Mastering Partial Least Squares Structural Equation Modeling (PLS-SEM) with SmartPls in 38 Hours*. iUniverse.

Wong, N. Y., & Ahuvia, C. A. (1998). Personal taste and family face: Luxury consumption in Confucian and Western societies. *Psychology & Marketing*, *15*(5), 423-441.

Yadav, R., & Pathak, G. S. (2016). Young consumers' intention towards buying green products in a developing nation: Extending the theory of planned behavior. *Journal of Cleaner Production*, *135*, 732-739.

Yeniaras, V., & Akkemik, A. K. (2017). Materialism and Fashion Consciousness: The Moderating Role of Status Consumption Tendencies and Religiosity. *Journal for the Scientific Study of Religion*, *00*(0), 1-16.

Zeithaml, V. A. (1988). Consumer Perceptions of Price, Quality, and Value: A Means-End Model and Synthesis of Evidence. *Journal of Marketing*, *52*(3), 2-22.

Zhang, X. S., & Chaipoopirutana, S. (2016). *Factors Affecting Repurchase Intention Towards Luxury Goods in Thailand* RSU

International Research Conference 2016, Bangkok, Thailand.

Zhu, B. (2019). Consumer Intention to Adopt Dockless Bike Sharing Scheme in Southern China-based on Value-Attitude-Behaviour Model. *Asia-Pacific Social Science Review (in Press)*.